DOI: https://doi.org/10.15407/techned2020.05.026

TWO-INVERTER-BASED PHOTOVOLTAIC INSTALLATION ADJUSTED BY THE MODIFIED SCHEME OF SPACE-VECTOR MODULATION

V. Oleschuk*, Dr.Sc., **V. Ermuratskii**, Dr.Sc.
Institute of Power Engineering of Moldova,
Academy Str. 5, Kishinau, MD-2028, Moldova.
E-mail: oleschukv@hotmail.com

Algorithms of synchronous one-stage modulation have been modified and disseminated for adjustment of two two-level inverters of transformer-based photovoltaic installation with specific double-delta configuration of inverter-side windings of power transformer. Modified algorithms of synchronous space-vector modulation, applied for control of inverters of PV system with specialized connection of windings of power transformer, assure improved spectral composition of winding voltages of transformer, characterized by the lacking in its spectra of even harmonics and undesirable subharmonics for any control modes and regimes of operation of system. References 9, figures 6, table 1.

Keywords: voltage source inverter, photovoltaic panels and arrays, multi-winding transformer, modulation strategy.

Introduction. Solar-energy-based photovoltaic (PV) renewable energy systems are ones of the most rapidly growing directions of research, implementation, and application between renewable sources of electrical energy. Effects of researchers are concentrated nowadays at both development of perspective structures and topologies of PV systems, and on investigation of control and modulation strategies of power electronic converters of PV installations [1-5]. Fig. 1 presents one of perspective configuration of transformer-based PV system consisting from two three-phase (standard) voltage source inverters VSI1 and VSI2, outputs of which are connected to the corresponding six windings of power double-delta transformer (PDDT) [6].

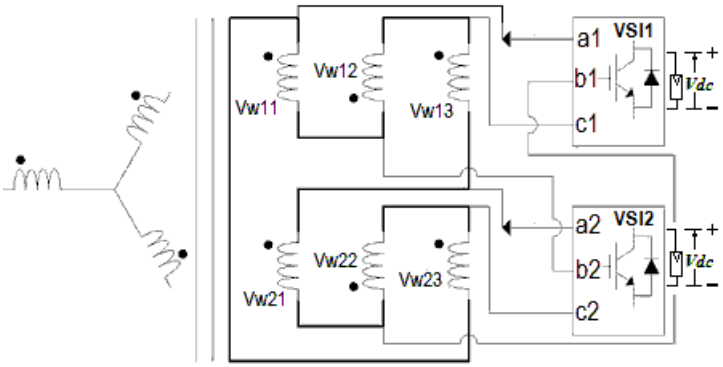

Fig. 1

Basic control dependences of PV installation with two PWM inverters. Based on the development of the methodology of synchronous space-vector modulation [7-9], and properties of PV system with PDDT [6], Table presents set of modified control dependences for the presented PV installation allowing synchronous and symmetrical regulation of winding voltages during adjustment of PV system, including

Switching frequency F_s Switching sub-cycle τ	Parameters of control signals and output voltage of VSIs (Fig. 2)	Instantaneous values of winding voltages $V_{w11} - V_{w13}$ of PDDT
$F_{s(PWMC)} = F(6n-3)$ $\tau_{PWMC} = 0,5F_s = [6F(2n-1)]^{-1}$ $F_{s(PWMD)} = F(8n-5)$ $\tau_{PWMD} = 1/[6F(2n-1.5)]$ where n=2,3,4….	$\beta_1 = 1.1m\tau$ $\beta_j = \beta_1 \cos[(j-1)\tau]$ $\gamma_j = \beta_{n-j+1}\{0.8-0.5\tan[(n-j)\tau]\}$ $\lambda_j = \tau - (\beta_j + \beta_{j+1})/2$	$V_{w11} = (2V_{a1} - V_{b1} - V_{c1})/3 - (V_{a2} - 2V_{b2} + V_{c2})/3$ $V_{w12} = (V_{a1} + V_{b1} - 2V_{c1})/3 - (-V_{a2} + 2V_{b2} - V_{c2})/3$ $V_{w13} = (-V_{a1} - V_{b1} + 2V_{c1})/3 - (-2V_{a2} + V_{b2} + V_{c2})/3$

control modes during fluctuation of frequency of electrical grid. In this Table F is fundamental frequency of electric grid (usually F=50 Hz with some small fluctuations), m is coefficient of modulation of inverters, V_{a1},

ORCID ID: *https://orcid.org/0000-0002-7413-4867

V_{b1}, V_{c1}, V_{a2}, V_{b2}, and V_{c2} are pole voltages of VSI1 and VSI2. Fig. 2 illustrates basic control and modulation parameters of inverters, and shows (inside the 90^0-time-interval) sequence of switching of each VSI, and the corresponding pole (Phases *a, b*) and line (V_{ab}) voltages of VSIs adjusted by algorithms of continuous (PWMC, Fig. 2, *a* [8]) and discontinuous (PWMD30, Fig. 2, *b* [8]) schemes of synchronous modulation.

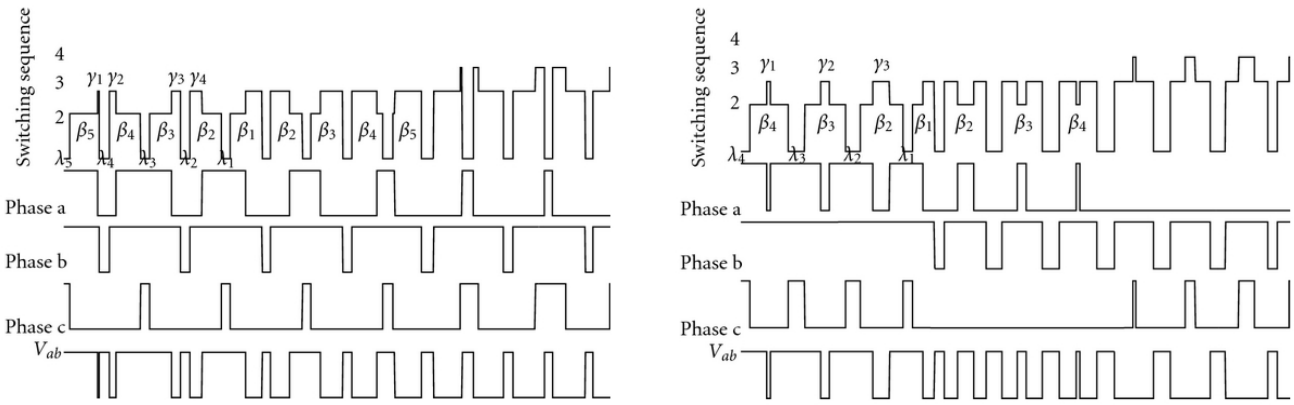

a ***b***

Fig. 2

Voltage waveforms of PV installation with two PWM inverters. Fig. 3 – Fig. 5 show basic voltage waveforms of the system (relative values of pole voltages of VSIs V_{a1}, V_{b1}, V_{a2}, V_{b2}, of line voltage V_{a1b1}, and of winding voltage V_{w11}). Also, harmonic spectra of voltages V_{a1b1} and V_{w11} have been presented in these figures. Curves in Fig. 3 correspond to installation with VSIs controlled by algorithms of discontinuous synchronous version-30 modulation (PWMD30 [8]), diagrams in Fig. 4 correspond to VSI-based system controlled by the scheme of discontinuous pulsewidth version-60 modulation (PWMD60 [8]), and curves in Fig. 5 correspond to installation with inverters adjusted by algorithms of the continuous synchronous PWM (PWMC [8]). Operating frequency of photovoltaic system is equal to *50Hz*, and average frequency of switching of power switches of VSIs is equal to 1.05 kHz. Modulation index of VSIs is equal to m=0.75.

Results of simulation of system, presented in Figs. 3 – Fig. 5, show, that for the all analyzed control modes both line voltages and winding voltages have quarter-wave symmetry and are characterized by the lacking in its spectra of even harmonics and sub-harmonics. It is shown also, that spectra of winding voltages are much better in comparison with spectra of the corresponding line voltages of VSIs.

Total Harmonic Distortion factor of voltages of transformer-based PV installation. Total Harmonic Distortion (THD) factor is an important parameter for comparison of integral harmonic composition of basic voltage waveforms of photovoltaic systems [1]. Fig. 6, *a*, *b* shows results of determination of THD of line voltage and winding voltage of the analyzed photovoltaic installation with two values of maximum numbers of calculated harmonics (k-th harmonics) – k=40 (Fig. 6, *a*), and k=100 (Fig. 6, *b*):

$$THD = (1/V_{w11_1})\sqrt{\sum_{k=2}^{40} V_{w11_k}^2} \text{ (Fig. 6, } a\text{);} \qquad THD = (1/V_{w11_1})\sqrt{\sum_{k=2}^{100} V_{w11_k}^2} \text{ (Fig. 6, } b\text{).}$$

Corresponding determination of value of THD factor of the V_{a1b1} and V_{w11} voltages of photovoltaic installation on the base of VSIs has been executed for systems controlled by continuous (PWMC) and two discontinuous (PWMD30 and PWMD60) versions of synchronous pulsewidth modulation. Average frequency of switchings of power switches of VSIs was equal to 1.05 kHz for these calculations. The presented results show remarkable improvement of spectral composition of winding voltages of inverter-side windings of PDDT of photovoltaic installation on the base on VSIs controlled by the modified algorithms of synchronous space-vector PWM, assuring to decrease of the corresponding losses of power transformer.

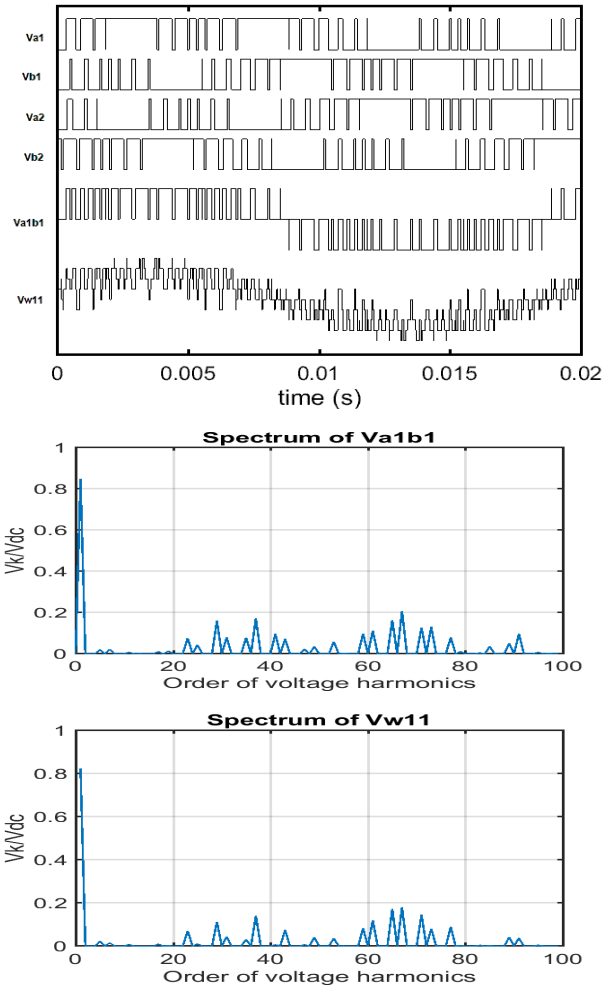

Fig. 3

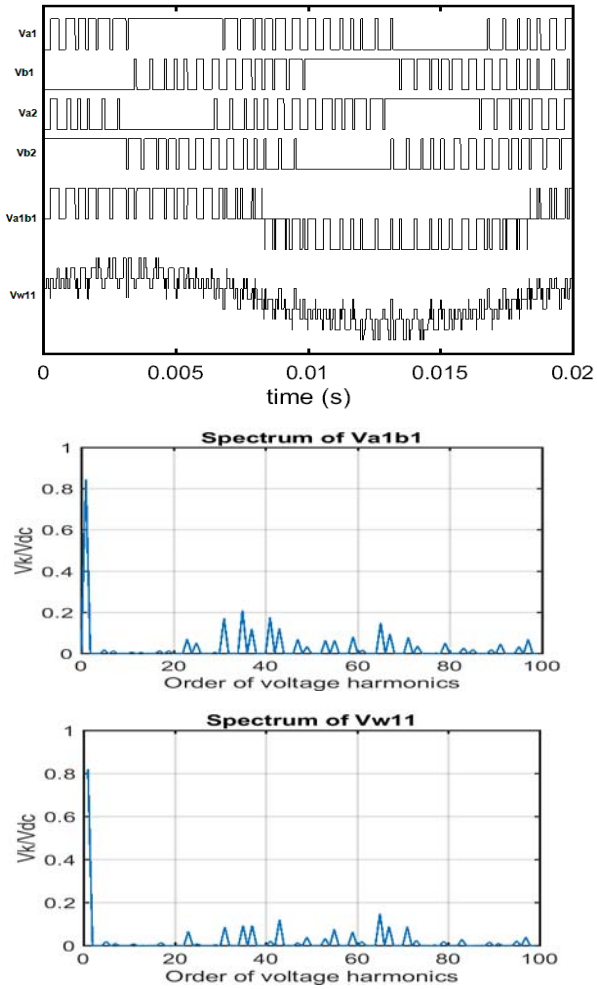

Fig. 4

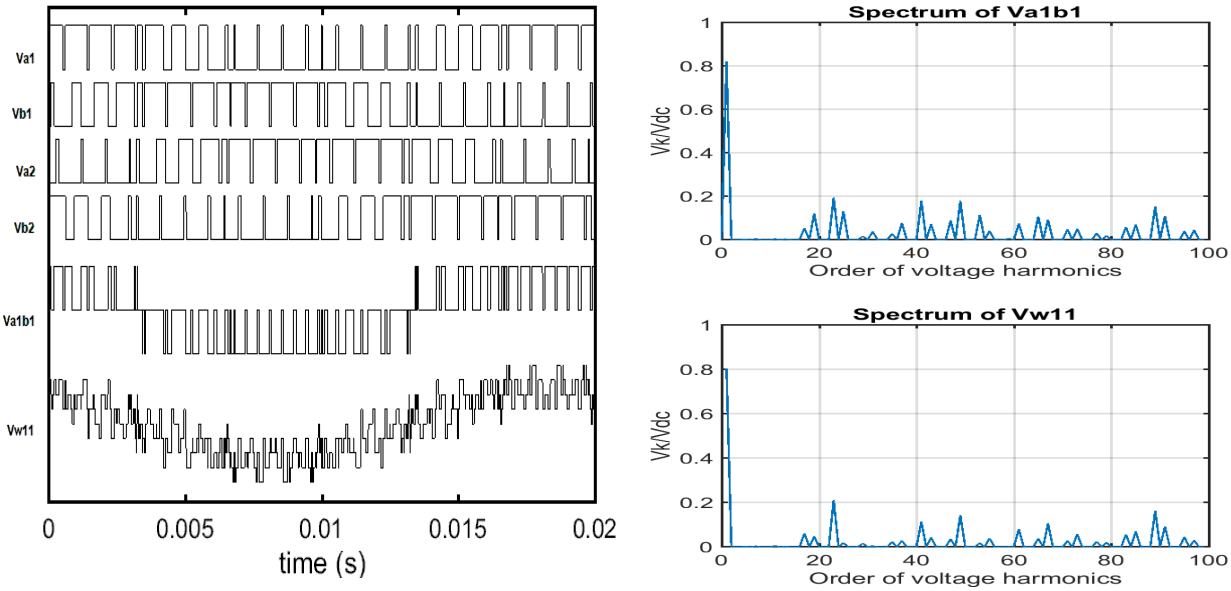

Fig. 5

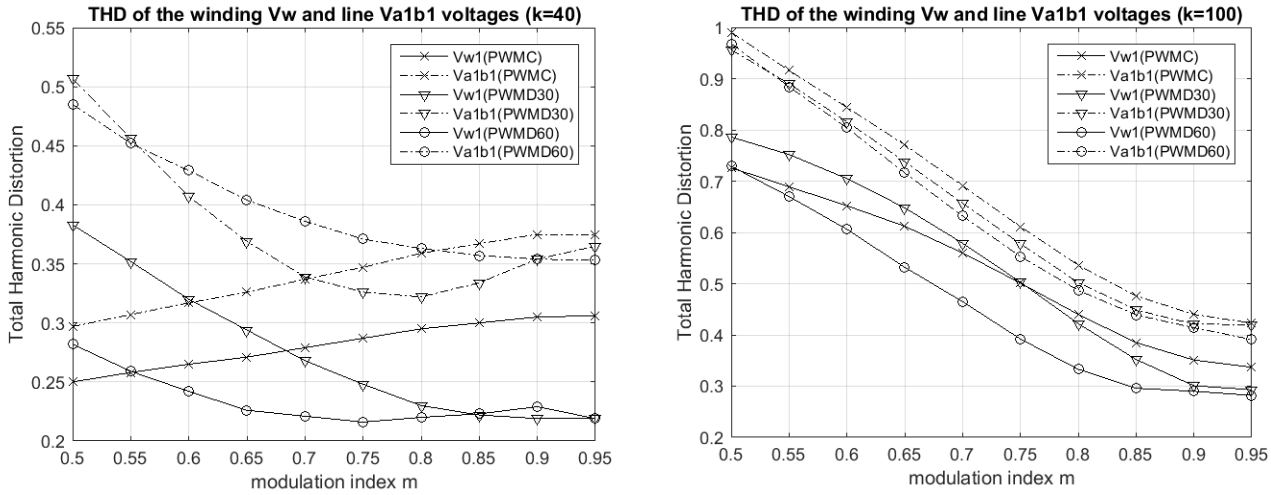

a ***b***

Fig. 6

Conclusion. Modified algorithms of synchronous space-vector PWM of two VSIs of transformer-based photovoltaic installation insure improved spectral composition of multilevel winding voltage of PDDT, characterized by the lacking in its spectra of even harmonics and undesirable subharmonics for any control regimes of operation of PV system. Also, the used scheme of determination of control signals and switching frequency of inverters provides synchronous voltage control during fluctuation of grid frequency, assures better harmonic spectra and integral spectral characteristics of winding voltage of PDDT in comparison with line-to-line voltage of inverters. Therefore, the corresponding reduction of losses in inverter-side windings of power transformer can be achieved. Results of comparative analysis of Total Harmonic Distortion factor of winding voltage of the analyzed photovoltaic system show big dependence of value of this factor (for systems on the base of converters with relatively low switching frequency) from number of voltage harmonics taken into consideration for calculation of Total Harmonic Distortion factor.

1. Aiello M., Cataliotti A., Favuzza S., Graditi G. Theoretical and experimental comparison of Total Harmonic Distortion factors for the evaluation of harmonic and interharmonic pollution of grid-connected photovoltaic systems. *IEEE Transaction on Power Delivery.* 2006. Vol. 21. No 3. Pp. 1390-1397.
2. Grandi G., Rossi C., Ostojic D., Casadei D. A new multilevel conversion structure for grid-connected PV applications. *IEEE Transaction on Industrial Electronics.* 2009. Vol. 56. No 11. Pp. 4416-4426.
3. Shavelkin A., Shvedchykova I. Multifunctional converter for single-phase combined power supply systems for local objects with a photovoltaic solar battery. *Tekhnichna Electrodynamika*. 2018. No 5. Pp. 92-95.
DOI: https://doi.org/10.15407/techned2018.05.092
4. Pires V.F., Cordeiro A., Foito D., Silva J.F. Three-phase multilevel inverter for grid-connected distributed photovoltaic systems based in three three-phase two-level inverters. *Solar Energy*. 2018. Vol. 174. Pp. 1026-1034.
5. Shavelkin A.A. Improvement of the structure for the current control loop with the use of PWM for the grid inverter of the combined power supply system. *Tekhnichna Electrodynamika*. 2019. No 3. Pp. 37-45. (Ukr)
DOI: https://doi.org/10.15407/techned2019.03.037
6. Park Y., Ohn S., Sul S-K. Multi-level operation with two-level converters through a double-delta source connected transformer. *Journal of Power Electronics*. 2014. Vol. 14. No 6. Pp. 1093-1099.
7. Blaabjerg F., Oleschuk V., Lungeanu F. Synchronization of output voltage waveforms in three-phase inverters for induction motor drives. *IEEE-IEEJ Power Conversion* Conference (PCC'2002*).* Osaka, Japan, 2002. Pp. 528-533.
8. Oleschuk V., Griva G., Profumo F., Tenconi A. Synchronized PWM control of symmetrical six-phase drives. IEEE International Conference *on Power Electronics (ICPE'2007).* Daegy, Korea, 2007. Pp. 147-152.
9. Oleschuk V., Barrero F. Standard and non-standard approaches for voltage synchronization of drive inverters with space-vector PWM: A survey. *International Review of Electrical Engineering*. 2014. Vol. 9. No 4. Pp. 688-707.

УДК 621.314.572

ДВУХИНВЕРТОРНАЯ ФОТОПРЕОБРАЗОВАТЕЛЬНАЯ СИСТЕМА, РЕГУЛИРУЕМАЯ НА БАЗЕ МОДИФИЦИРОВАННОЙ СХЕМЫ ВЕКТОРНОЙ МОДУЛЯЦИИ

В. Олещук, докт. техн. наук, **В. Ермуратский,** докт. техн. наук
Институт энергетики Молдовы,
ул. Академическая, 5, Кишинев, MD-2028, Молдова.
E-mail: **oleschukv@hotmail.com**

Выполнена диссеминация схем и алгоритмов синхронной векторной модуляции для регулирования двух трехфазных инверторов напряжения фотопреобразовательной системы на базе силового трансформатора с соединением инверторных обмоток трансформатора по схеме двойного треугольника. Использование модифицированных алгоритмов синхронной векторной модуляции позволяет при этом обеспечить улучшенный спектральный состав напряжения на обмотках силового трансформатора с соответствующим снижением потерь в обмотках трансформатора и во всей фотопреобразовательной системе. Библ. 9, рис. 6, табл. 1.

Ключевые слова: инвертор напряжения, фотоэлектрические панели и массивы, многообмоточный трансформатор, модуляционная стратегия.

ДВУХІНВЕРТОРНАЯ ФОТОПРЕОБРАЗОВАТЕЛЬНАЯ СИСТЕМА, РЕГУЛЬОВАНА НА БАЗІ МОДІФІЦІРОВАННОЙ СХЕМИ ВЕКТОРНОЇ МОДУЛЯЦІЇ

В. Олещук, докт. техн. наук, **В. Ермуратський,** докт. техн. наук
Інститут енергетики Молдови,
вул. Академічна, 5, Кишинів, MD-2028, Молдова.
E-mail: **oleschukv@hotmail.com**

Виконано дисемінацію схем і алгоритмів синхронної векторної модуляції задля регулювання двох трьохфазних інверторів напруги фотоперетворювальної системи на базі силового трансформатора із з'єднанням інверторних обмоток трансформатора за схемою подвійного трикутника. Використання модифікованих алгоритмів синхронної векторної модуляції дає змогу при цьому забезпечити покращений спектральний склад напруги на обмотках силового трансформатора з відповідним зниженням втрат у обмотках трансформатора і в усій фотоперетворювальної системі. Бібл. 9, рис. 6, табл. 1.

Ключові слова: інвертор напруги, фотоелектричні панелі та масиви, багатообмотувальний трансформатор, модуляційна стратегія.

Надійшла 28.02.2020
Остаточний варіант 01.06.2020